G-7279-LM45S

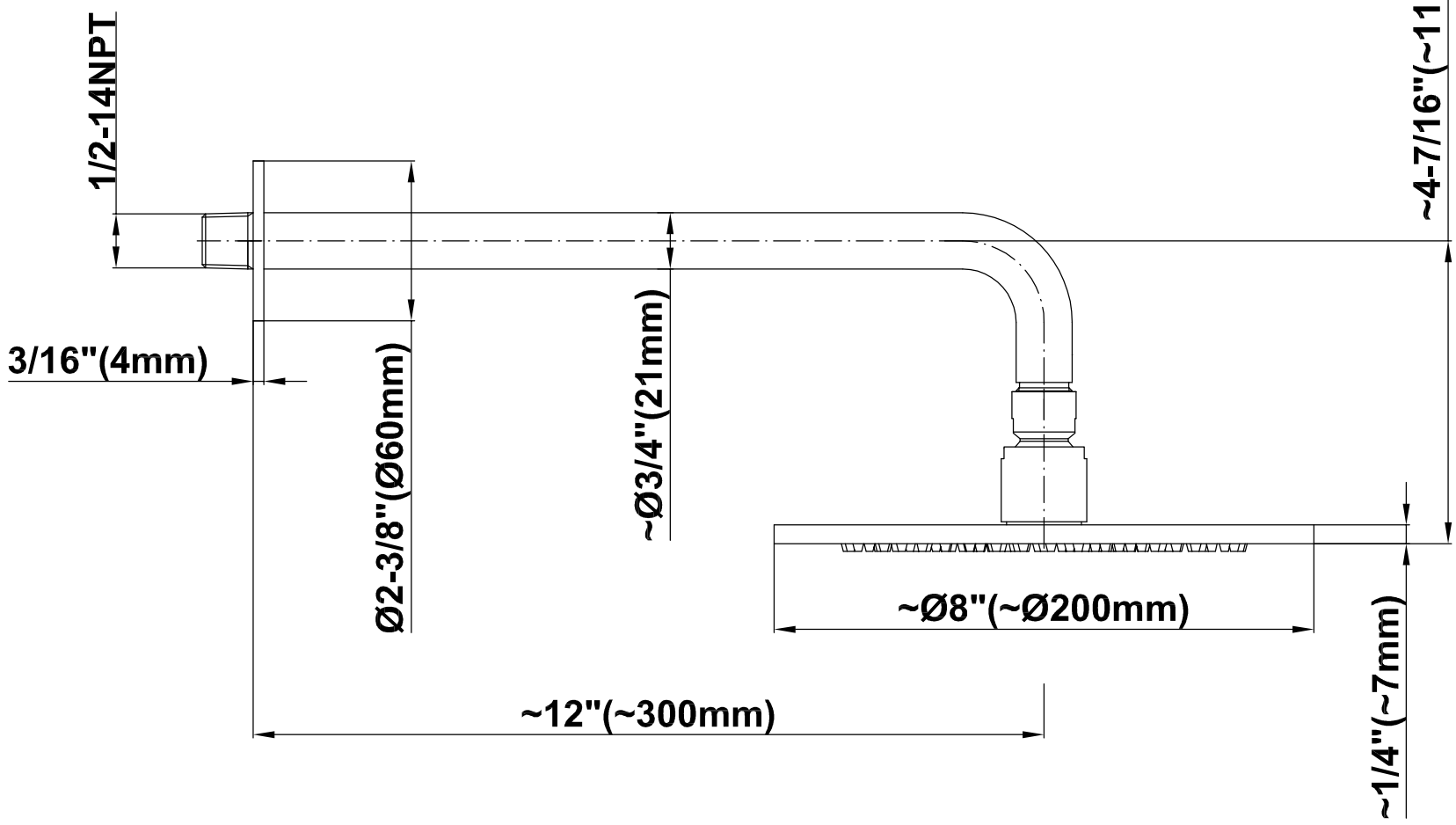

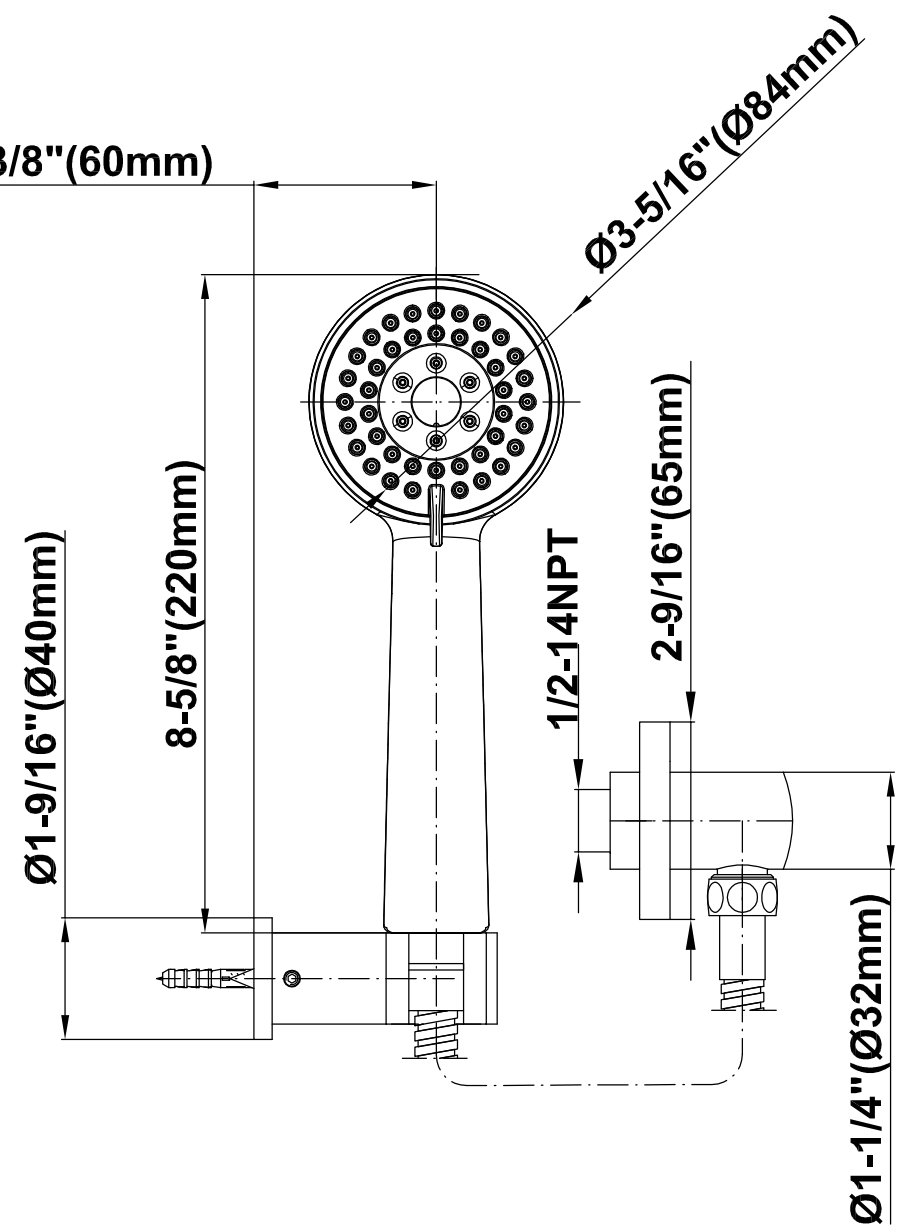

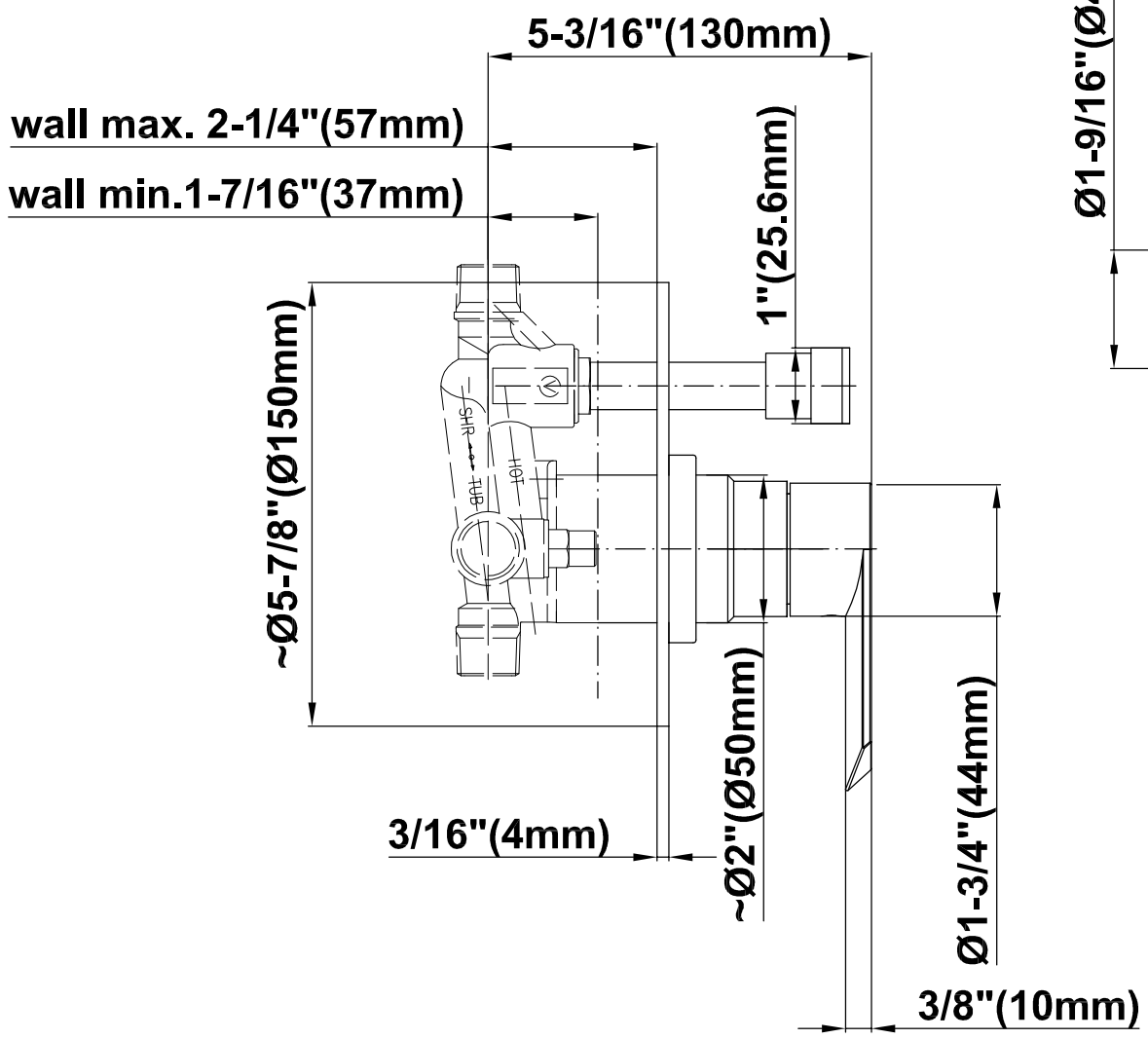

GRAFF®

CUTTING EDGE DESIGN